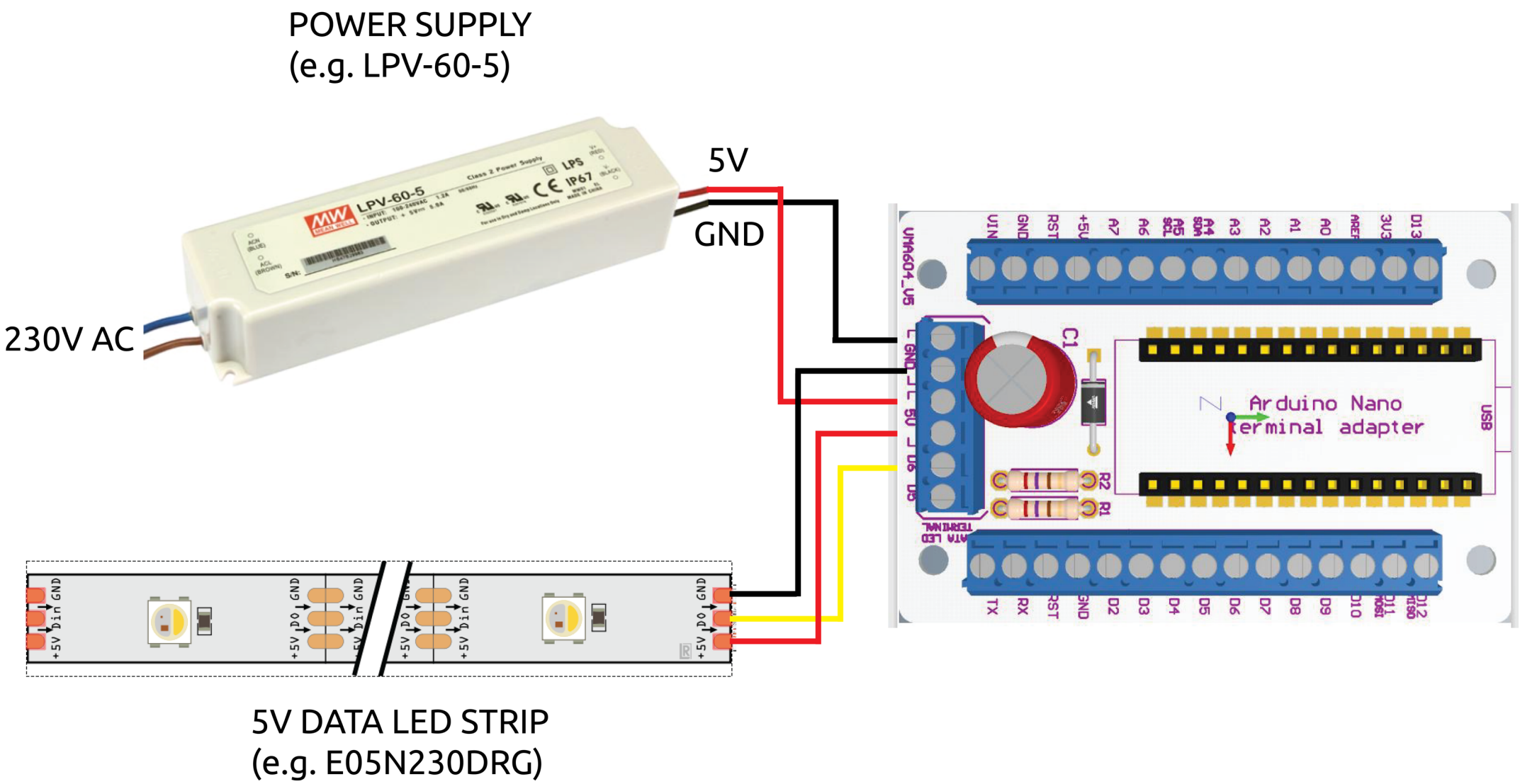
POWER SUPPLY
(e.g. LPV-60-5)
5V
GND
230V AC
LPV-60-5
Arduino Nano
terminal adapter
5V DATA LED STRIP
(e.g. E05N230DRG)