BSE 44.0-RK
Order code: BSE0008

Mechanical switching element

BALLUFF
sensors worldwide

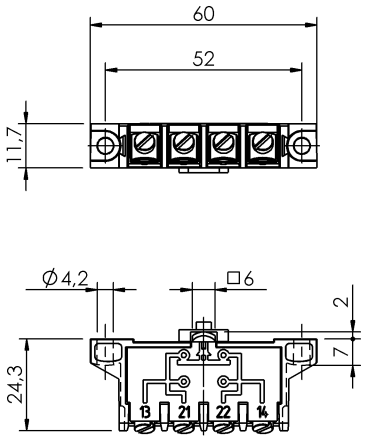

Sensing data

Use with series	BSW 819-492 BSW 819-493
Switching principle	Snap switch, self-cleaning
Contact system	Dual output function One NO and one NC Galvanically isolated Double-interrupting
Contact arrangement	NC: 21+22, NO: 13+14
Wire cross-section max.	2x1.5 mm²
Connection type	Screw connection M3
Mechan. life expectancy min.	30 mil. operations
Cover material	Thermoplast
Housing material	Fiberglass reinf. Thermoplast
Ambient temperature Ta min.	-5 °C
Ambient temperature Ta max.	85 °C

Electrical data

Insulation	Group C (VDE 0110)
Nominal voltage	250 V AC
Continuous current	6.0 A
Minimum load at 24V DC	20.0 mA
Contact resistance max.	40 mOhm (new condition)
Switching cap. 250V AC 40-60Hz	6A cos φ = 1 2A cos φ = 0.8 1A cos φ = 0.4
Switching capacity 220V DC	0.5A, L/R = 200ms
Switching capacity 24V DC	4 A, L/R = 200 ms
Contact material	Galvanically applied silver

Mechanical data

Switching operation force min.	3.60 N
Switching operation force max.	4.80 N
Return force min.	1.10 N
Bounce time max.	1.5 ms
Switchover time max.	10.0 ms
Switching time	10 ms
Switching operations / min	300
Tightening torque max.	120 Ncm

CE

Definitions see general catalog

Subject to change without notice.

000000000000/231203/00000000

www.balluff.com
Balluff Germany: +49 7158 173-0, +49 7158 173-370
Balluff USA: +1-800-543-8390
Balluff China: +86 21 5089 9970