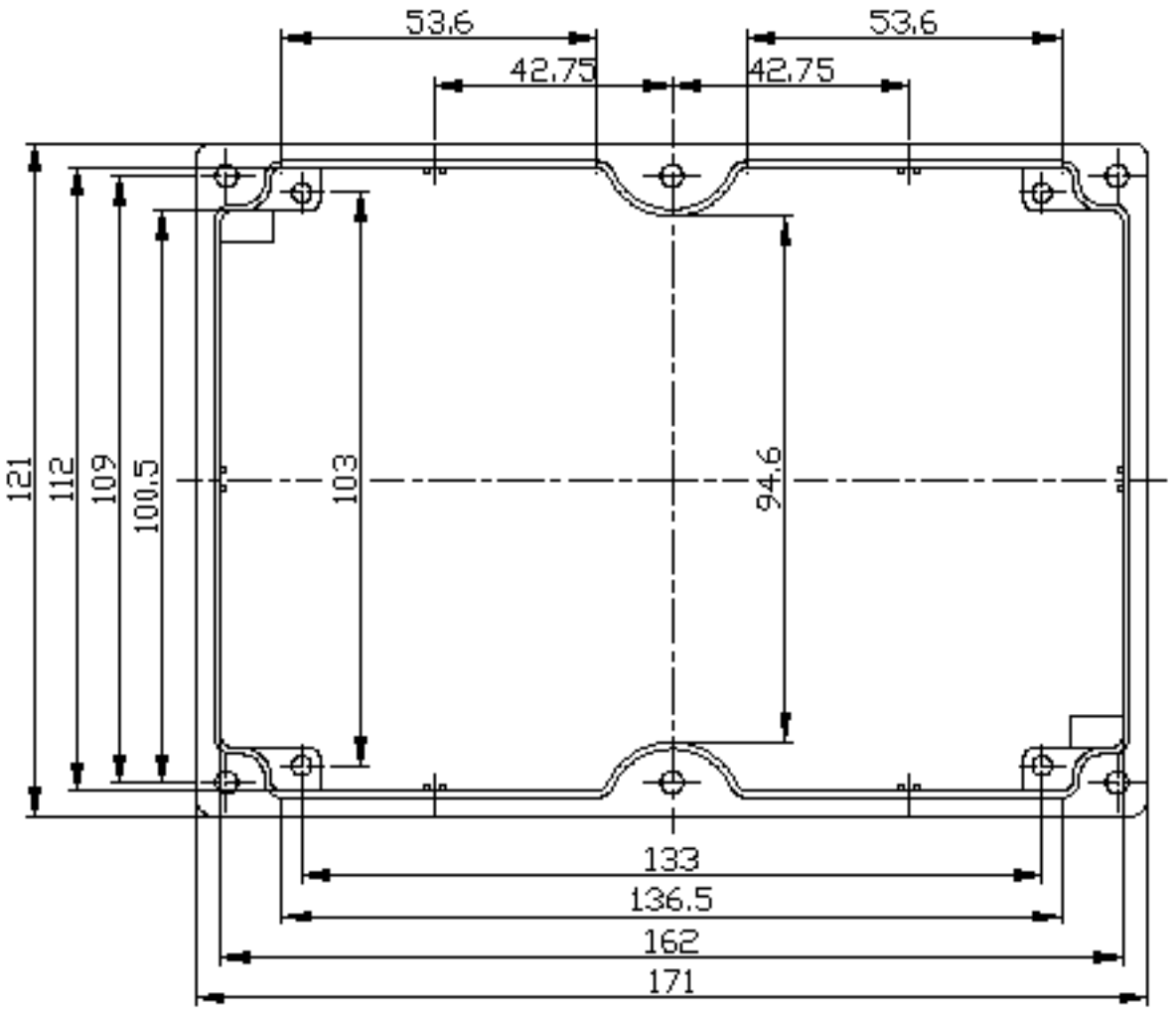
53.6
53.6
42.75
42.75
121
112
109
100.5
103
94.6
133
136.5
162
171

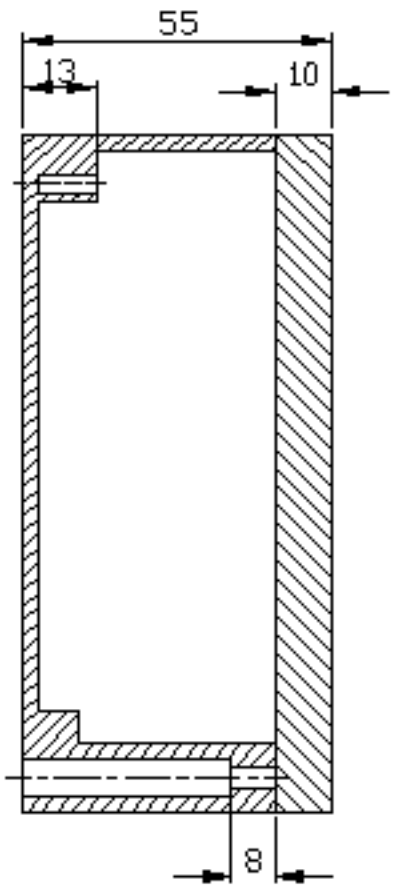
55
13
10
8